Forstilling

165, 168, 175, 178, 185, 188,

POS.	FORSTILLING	BEST.NR.
1	FORING KONGEBOLT	MF 897235
2	FRONTOPPHENG	MG1885573[B]
3	MUTTER	MF 363469
4	SKRUE	MG 1862267
5	SENTERBOLT	MF 898016
6	BOLT	MF 362501
7	FORING	MF 897712
8	FRAMAKSEL[E]	MF 897920
9	BOLT	MF 182501
10	MUTTER	MF 353435
11	SPINDELHOLDER *H*	MF 897092[N]
12	SPINDELHOLDER *V*	MF 897093[N]
13	SHIMS *2.70*	MF 898017
14	SHIMS *0.71-0.76*	MF 898018
	SHIMS *0.87-0.92*	MF 898019
	SHIMS *0.99-1.04*	MF 898020
	SHIMS *1.12-1.17*	MF 882868
	SHIMS *1.25-1.30*	MF 882869
15	MUTTER	MF 894060
16	HODEBOLT	MF 894061
17	SKIVE	ME 22764
18	SPINDELHOLDER *Std*	MF 898220[F]
19	SPINDELHOLDER *Høy 17"*	MF 897471[C]
20	SPINDELHOLDER *Høy 19"*	MF 883572[D]
21	FRAMAKSEL	MF 897625[G]

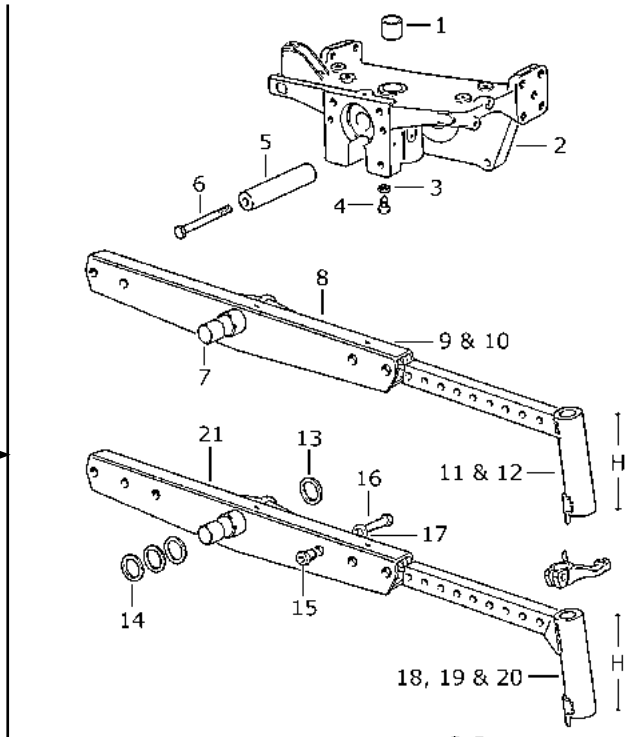

Servostyring

165, 175, 178, 185, 188,

POS.	SERVOSTYRING *100, 200*[H]
1	MG 1888905
2	MF 881729
3	MF 353430
4	MF 881727
5	MF 375108
6	MF 182723
7	MF 183080
8	MF 354039
9	MF 355917
10	MF 190560
11	MG 1853466
12	MF 884797[I]
13	MF 885549[J]
14	MF 353436
15	MG 1671335
16	MF 897146
17	MF 897159
18	MF 897148
19	MF 182725
20	MF 898355
21	MG 1671322
22	MF 897235
23	MF 894061
24	MF 353775
25	MF 894060
26	MG 1810366
27	MF 886802[K]
28	MF 886797
29	MF 881736
30	MF 829258[L]
	MF 829259[M]
31	MF 898366
32	MF 375090
33	MF 897712[O]
34	MF 898017[P]

POS.	SERVOSTYRING *100, 200*[H]
35	MF 898016
36	MF 375111
37	MG 1862267
38	MF 897235
39	MF 196079
40	MF 881736
41	MF 196079
42	MF 897923
43	MG 1676666[Q]
	MG 1676665[R]
44	UNC 716 234
45	VPJ 4016
46	ME 40134

POS.	STYREARM *100, 200*[H]
1	MF 355917
2	MF 353436
3	MG 1671335
4	MF 376432
5	MG 1671322
6	MF 829258
7	MF 829259
8	MF 190560
9	MF 898355
10	MF 376267
11	MF 182725
12	VPJ 4016

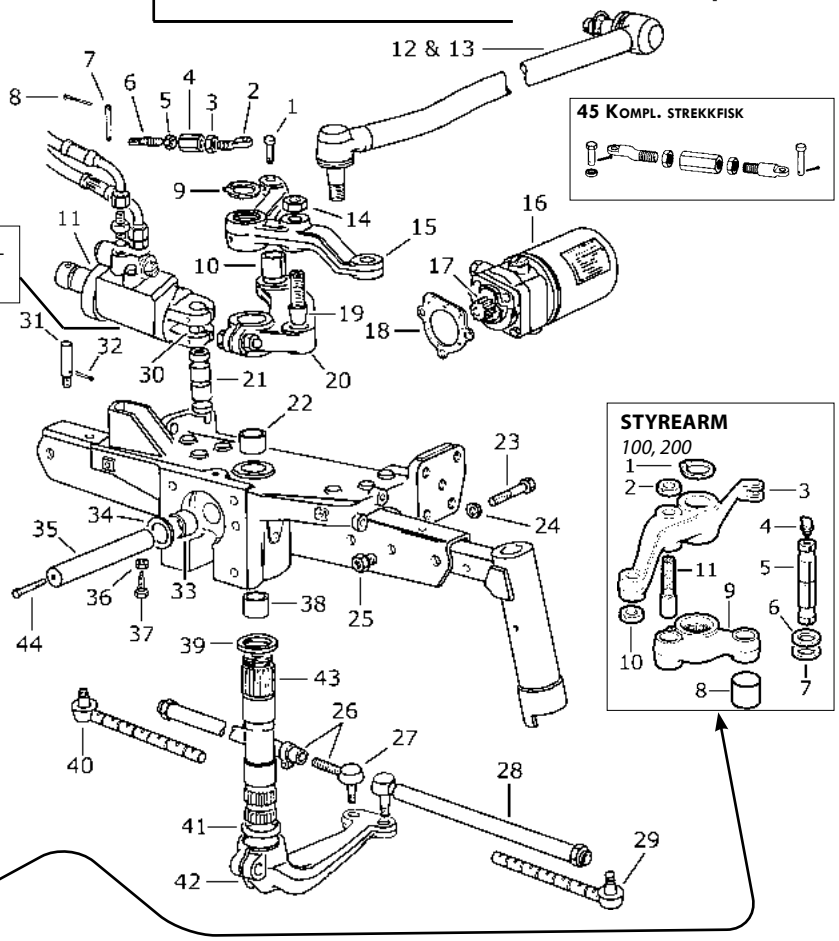

B Frontoppheng.
Passer ikke tidlige 175/178.
C 165 ›| s.nr. 508596 og øvrige MF-modeller.
H: 287 Høy klaring 17". Heavy Duty.
D 165 |› s.nr. 508597 og øvrige MF-modeller.
Høy klaring 19". Heavy Duty.
E 2 hull. Normal Duty.
F H: 210 Std klaring. HD.
G 3 hull. Heavy Duty.
H 165, 175, 178, 185, 188
I 115.5 cm total lengde.
J 121.9 cm total lengde.
K Bare kule.
L Shims for opp/ned slakk. 0.13
M Shims for opp/ned slakk. 0.56
N Normal Duty.
O Foring.
P Shims. 2.7 mm.
Q Manuell.
R Servo. 100-serie